# Linear Drive Exploded Diagram

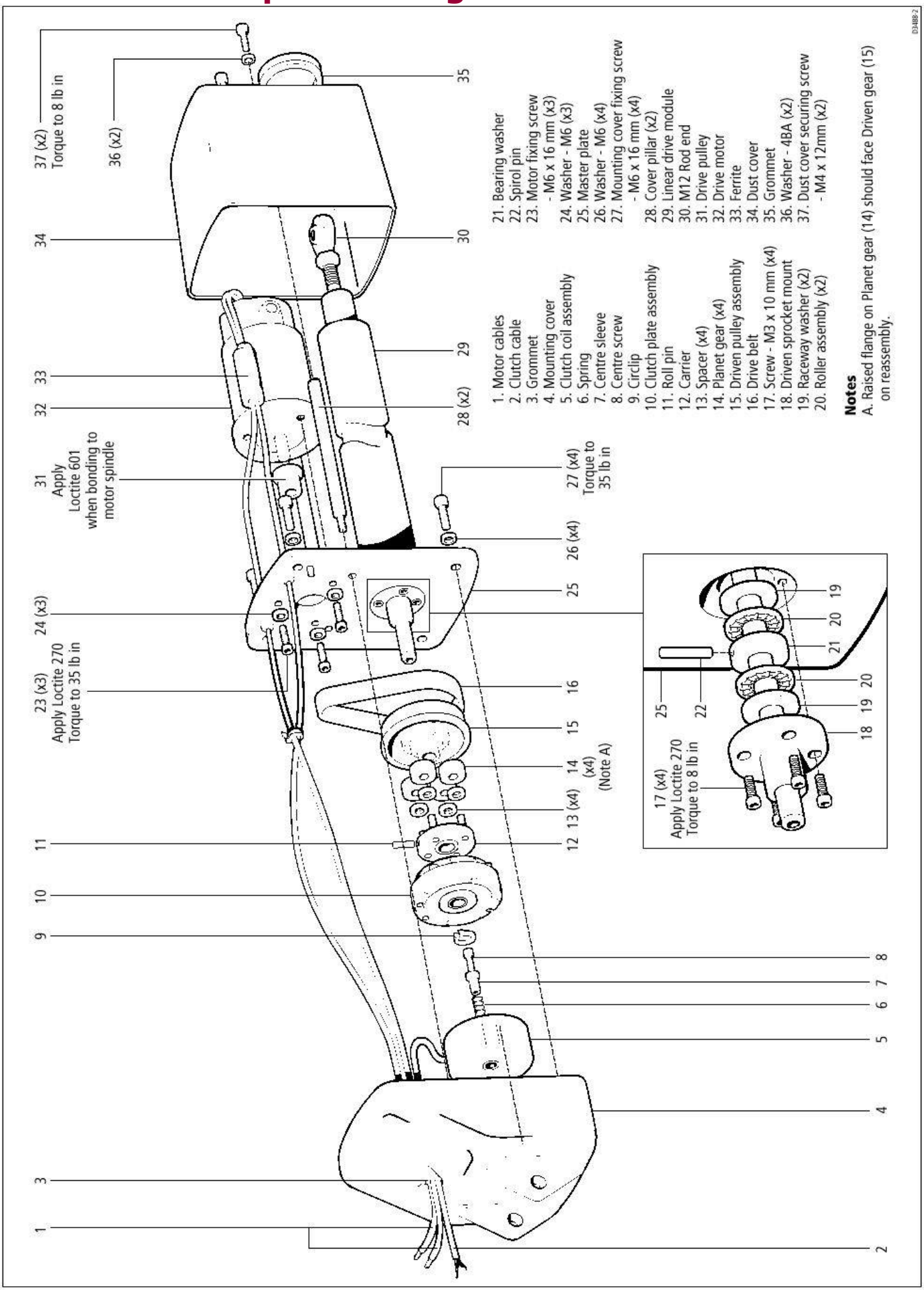



Hudson Marine

Tel. +44(0)23 8045 5129
Email. info@hudsonmarine.co.uk
Web. www.hudsonmarine.co.uk

Mercury Yacht Harbour
Satchel Lane
Hamble
Southampton
SO31 4HQ